Product datasheet
Characteristics

XB4BW73731B5
Illuminated double-headed push button, metal, Ø22, 1 green flush I + 1 pilot light + 1 red projecting O, 1 NO + 1 NC



Main

Range of product	Harmony XB4
Product or component type	Illuminated double-headed push-button
Device short name	XB4
Bezel material	Chromium plated metal
Head type	Standard
Mounting diameter	22 mm
Colour of marking	White marking when green, red or black caps Black marking when white caps
Light source	Protected LED
Light source colour	White
Device presentation	Complete product

Complementary

Fixing collar material	Zamak
Net weight	0.13 kg
Resistance to high pressure washer	7000000 Pa at 55 °C, distance : 0.1 m
Shape of signaling unit head	Rectangular
Type of operator	spring return
Operator profile	1 flush - 1 projecting push-buttons - 1 central pilot light
Operators description	Green "I" - red "O"
Operator profile	Green flush, I (white) Red projecting, O (white)
Contacts type and composition	1 NO + 1 NC
Contact operation	Slow-break
Contacts usage	Standard contacts
Positive opening	With conforming to EN/IEC 60947-5-1 appendix K
Operating travel	1.5 mm (NC changing electrical state)

Disclaimer: This documentation is not intended as a substitute for and is not to be used for determining suitability or reliability of these products for specific user applications

	2.6 mm (NO changing electrical state) 4.3 mm (total travel)
Operating force	3.5 N NC changing electrical state 3.8 N NO changing electrical state
Mechanical durability	1000000 cycles
Connections - terminals	Screw clamp terminals, <= 2 x 1.5 mm² with cable end conforming to EN/IEC 60947-1 Screw clamp terminals, >= 1 x 0.22 mm² without cable end conforming to EN/IEC 60947-1
Tightening torque	0.8…1.2 N.m conforming to EN 60947-1
Shape of screw head	Cross compatible with JIS No 1 screwdriver Cross compatible with Philips no 1 screwdriver Cross compatible with pozidriv No 1 screwdriver Slotted compatible with flat Ø 4 mm screwdriver Slotted compatible with flat Ø 5.5 mm screwdriver
Contacts material	Silver alloy (Ag/Ni)
Short-circuit protection	10 A cartridge fuse type gG conforming to EN/IEC 60947-5-1
[Ith] conventional free air thermal current	10 A conforming to EN/IEC 60947-5-1
[Ui] rated insulation voltage	600 V (pollution degree 3) conforming to EN 60947-1
[Uimp] rated impulse withstand voltage	6 kV EN 60947-1
[Ie] rated operational current	3 A at 240 V, AC-15, A600 conforming to EN/IEC 60947-5-1 6 A at 120 V, AC-15, A600 conforming to EN/IEC 60947-5-1 0.1 A at 600 V, DC-13, Q600 conforming to EN/IEC 60947-5-1 0.27 A at 250 V, DC-13, Q600 conforming to EN/IEC 60947-5-1 0.55 A at 125 V, DC-13, Q600 conforming to EN/IEC 60947-5-1 1.2 A at 600 V, AC-15, A600 conforming to EN/IEC 60947-5-1
Electrical durability	1000000 cycles, AC-15, 2 A at 230 V, operating rate <3600 cyc/h, load factor: 0.5 conforming to EN/IEC 60947-5-1 appendix C 1000000 cycles, AC-15, 3 A at 120 V, operating rate <3600 cyc/h, load factor: 0.5 conforming to EN/IEC 60947-5-1 appendix C 1000000 cycles, AC-15, 4 A at 24 V, operating rate <3600 cyc/h, load factor: 0.5 conforming to EN/IEC 60947-5-1 appendix C 1000000 cycles, DC-13, 0.2 A at 110 V, operating rate <3600 cyc/h, load factor: 0.5 conforming to EN/IEC 60947-5-1 appendix C 1000000 cycles, DC-13, 0.5 A at 24 V, operating rate <3600 cyc/h, load factor: 0.5 conforming to EN/IEC 60947-5-1 appendix C
Electrical reliability	Λ < 10exp(-6) at 5 V and 1 mA in clean environment conforming to EN/IEC 60947-5-4 Λ < 10exp(-8) at 17 V and 5 mA in clean environment conforming to EN/IEC 60947-5-4
Signalling type	Steady
Bulb base	Integral LED
[Us] rated supply voltage	24 V AC/DC at 50/60 Hz
Supply voltage limits	19.2…30 V DC 21.6…26.4 V AC
Current consumption	18 mA
Service life	100000 h at rated voltage and 25 °C
Surge withstand	1 kV conforming to IEC 61000-4-5
Compatibility code	XB4

Environment

Protective treatment	TH
Ambient air temperature for storage	-40…70 °C
Ambient air temperature for operation	-40…70 °C
Electrical shock protection class	Class I conforming to IEC 60536
IP degree of protection	IP66 conforming to IEC 60529 IP69K conforming to IEC 60529 IP69 conforming to IEC 60529
NEMA degree of protection	NEMA 13 NEMA 4X
IK degree of protection	IK06 conforming to IEC 50102
Standards	EN/IEC 60947-1 EN/IEC 60947-5-1 CSA C22.2 No 14 JIS C8201-5-1

	EN/IEC 60947-5-5 EN/IEC 60947-5-4 UL 508 JIS C8201-1
Product certifications	DNV LROS (Lloyds register of shipping) CSA RINA BV UL listed GL
Vibration resistance	5 gn (f= 2…500 Hz) conforming to IEC 60068-2-6
Shock resistance	30 gn (duration = 18 ms) for half sine wave acceleration conforming to IEC 60068-2-27 50 gn (duration = 11 ms) for half sine wave acceleration conforming to IEC 60068-2-27
Resistance to fast transients	2 kV conforming to IEC 61000-4-4
Resistance to electromagnetic fields	10 V/m conforming to IEC 61000-4-3
Resistance to electrostatic discharge	6 kV on contact (on metal parts) conforming to IEC 61000-4-2 8 kV in free air (in insulating parts) conforming to IEC 61000-4-2
Electromagnetic emission	Class B conforming to IEC 55011

Packing Units

Unit Type of Package 1	PCE
Number of Units in Package 1	1
Package 1 Weight	126.67 g
Package 1 Height	3.2 cm
Package 1 width	5.5 cm
Package 1 Length	8.8 cm

Offer Sustainability

Sustainable offer status	Green Premium product
REACh free of SVHC	Yes
EU RoHS Directive	Pro-active compliance (Product out of EU RoHS legal scope) EU RoHS Declaration
Mercury free	Yes
RoHS exemption information	Yes
China RoHS Regulation	China RoHS declaration
Environmental Disclosure	Product Environmental Profile
Circularity Profile	End of Life Information
WEEE	The product must be disposed on European Union markets following specific waste collection and never end up in rubbish bins

Contractual warranty

Warranty	18 months

XB4BW73731B5

Dimensions

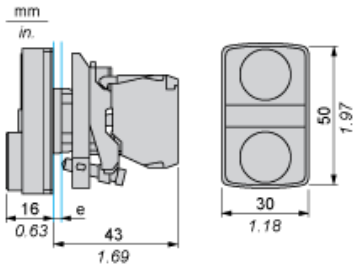

XB4BW73731B5

Panel Cut-out for Pushbuttons, Switches and Pilot Lights (Finished Holes, Ready for Installation)

Connection by Screw Clamp Terminals or Plug-in Connectors or on Printed Circuit Board	Connection by Faston Connectors
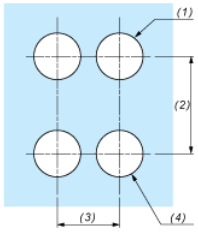	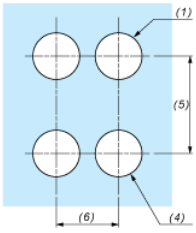

(1)	Diameter on finished panel or support
(2)	40 mm min. / 1.57 in. min.
(3)	30 mm min. / 1.18 in. min.
(4)	Ø 22.5 mm / 0.89 in. recommended (Ø 22.3 mm $_{0}^{+0.4}$ / 0.88 in. $_{0}^{+0.016}$)
(5)	45 mm min. / 1.78 in. min.
(6)	32 mm min. / 1.26 in. min.

Pushbuttons, Switches and Pilot Lights for Printed Circuit Board Connection

Panel Cut-outs (Viewed from Installer's Side)

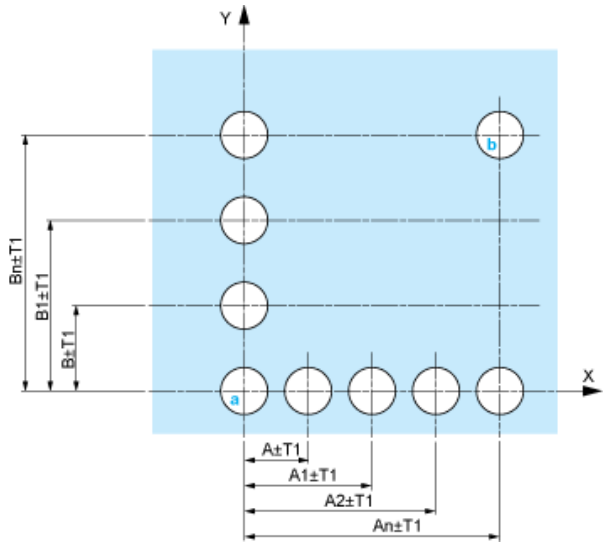

A: 30 mm min. / 1.18 in. min.
B: 40 mm min. / 1.57 in. min.

Printed Circuit Board Cut-outs (Viewed from Electrical Block Side)

Dimensions in mm

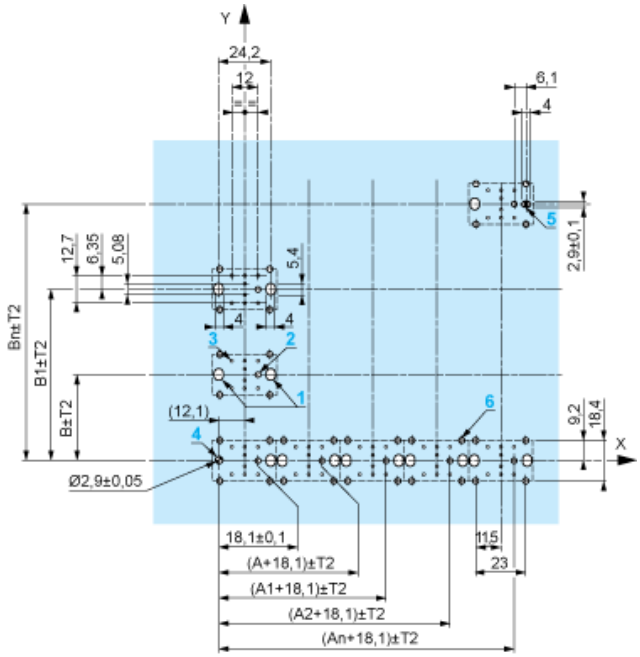

A: 30 mm min.
B: 40 mm min.

Dimensions in in.

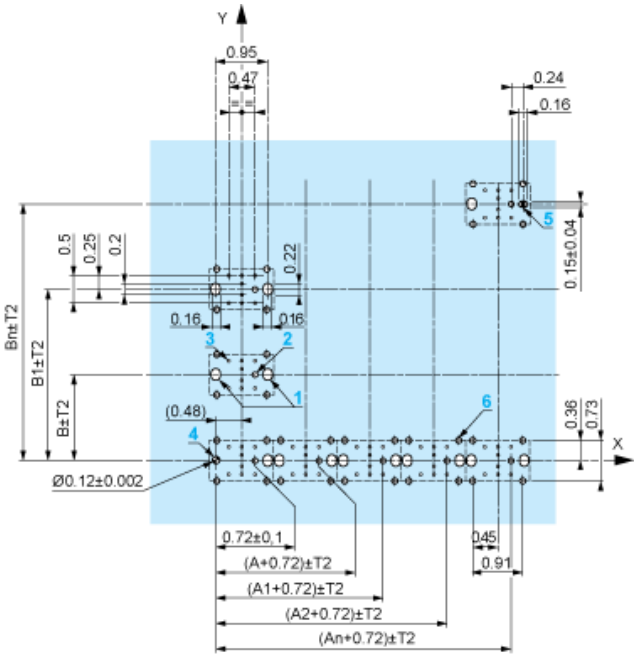

A: 1.18 in. min.
B: 1.57 in. min.

General Tolerances of the Panel and Printed Circuit Board

The cumulative tolerance must not exceed 0.3 mm / 0.012 in: T1 + T2 = 0.3 mm max.

Installation Precautions

- Minimum thickness of circuit board: 1.6 mm / 0.06 in.
- Cut-out diameter: 22.4 mm ± 0.1 / 0.88 in. ± 0.004
- Orientation of body/fixing collar ZB4 BZ009: ± 2°30’ (excluding cut-outs marked a and b).
- Tightening torque of screws ZBZ 006: 0.6 N.m (5.3 lbf.in) max.
- Allow for one ZB4 BZ079 fixing collar/pillar and its fixing screws:
  - every 90 mm / 3.54 in. horizontally (X), and 120 mm / 4.72 in. vertically (Y).
  - with each selector switch head (ZB4 BD•, ZB4 BJ•, ZB4 BG•).

The fixing centers marked a and b are diagonally opposed and must align with those marked 4 and 5.

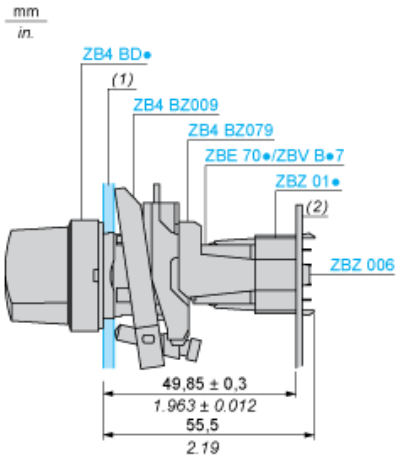

(1) Panel
(2) Printed circuit board

Mounting of Adapter (Socket) ZBZ 01•

- 1 2 elongated holes for ZBZ 006 screw access
- 2 1 hole Ø 2.4 mm ± 0.05 / 0.09 in. ± 0.002 for centring adapter ZBZ 01•
- 3 8 × Ø 1.2 mm / 0.05 in. holes
- 4 1 hole Ø 2.9 mm ± 0.05 / 0.11 in. ± 0.002, for aligning the printed circuit board (with cut-out marked a)
- 5 1 elongated hole for aligning the printed circuit board (with cut-out marked b)
- 6 4 holes Ø 2.4 mm / 0.09 in. for clipping in adapter ZBZ 01•

Dimensions An + 18.1 relate to the Ø 2.4 mm ± 0.05 / 0.09 in. ± 0.002 holes for centring adapter ZBZ 01•.