



BS1010		
Product		Button Switch
Serial		BS Series
Action		Snap Action
Contact		1NO
Current	**Ie**	6 A (250V AC)
Usage Category		AC15
Mechanical Life (Min Qty)		1000000
Electrical Life (Min Qty)		100000
Operating Frequency (On-Off/Hour)		Mech. 3000 Elec. 900
Insulation Voltage (Ui)		690V
Impulse Withstand Voltage (Uimp)		2.5 kV
Dielectric Strength (Body-Contact)		1.890V AC
Dielectric Strength (Contact-Contact)		1.890V AC
Isolation Resistance		10 MΩ min. (500V DC)
Operating Temperature		-25 / +80 °C
Pollution Degree		3
Protection Degree		IP40
Contact Material		AgNi
Cable Section		Terminal 6,3*0,8 mm
		1 kA
Specifications	V0 material	
	Snap or slow action contact block type	
Standards / Certificates	TS EN 60947-5-1 VDE 0660	

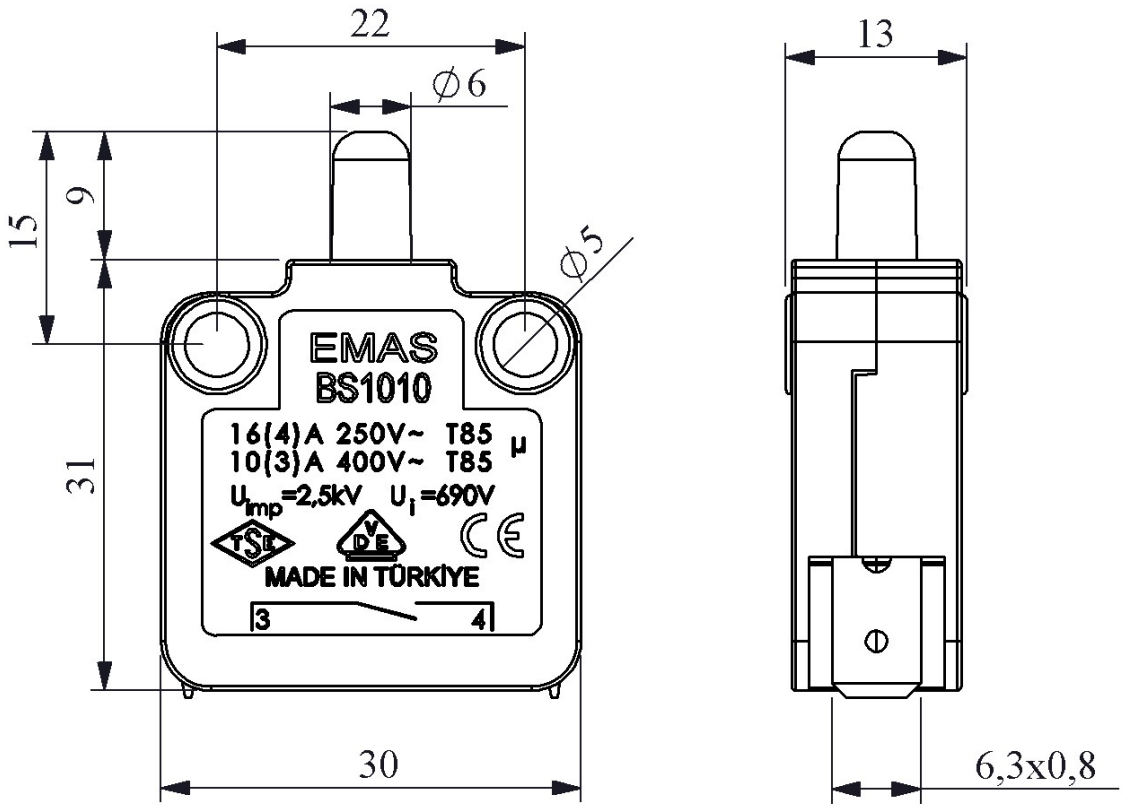

Devre Şeması



Ani Hareketli