



L51K13SOM103		
Product		Limit Switch
Serial		L51 Metal Body
Actuator Dia		7 mm
Actuator Material		Metal Blunt
Actuator		Spring Lever
Contact Action		Snap Action
Contact		1NO+1NC
Current (Ie)		3 A (240V AC)
Usage Category		AC15
Mechanical Life (Min Qty)		10000000
Electrical Life (Min Qty)		1000000
Operating Frequency (On-Off/Hour)		Mech. 3000 Elec. 1800
Insulation Voltage (Ui)		300 V
Impulse Withstand Voltage (Uimp)		2.5 kV
Dielectric Strength (Body-Contact)		1.890V AC
Dielectric Strength (Contact-Contact)		1.890V AC
Isolation Resistance		10 MΩ (500 V DC)
Operating Temperature		-25 / + 80 °C
Pollution Degree		3
Protection Degree		IP65
Contact Material		AgNi
Cable Section		1-2.5 mm2
Screw Torque		1.5Nm
		1 kA
Specifications	Metal Body and Cover	
	1 cable entry suitable for PG13.5 or M20x1.5 optional gland	
	Changeable contact block	

	Different actuator options
Standards / Certificates	TS EN 60947-5-1 UL 508 VDE 0660
	

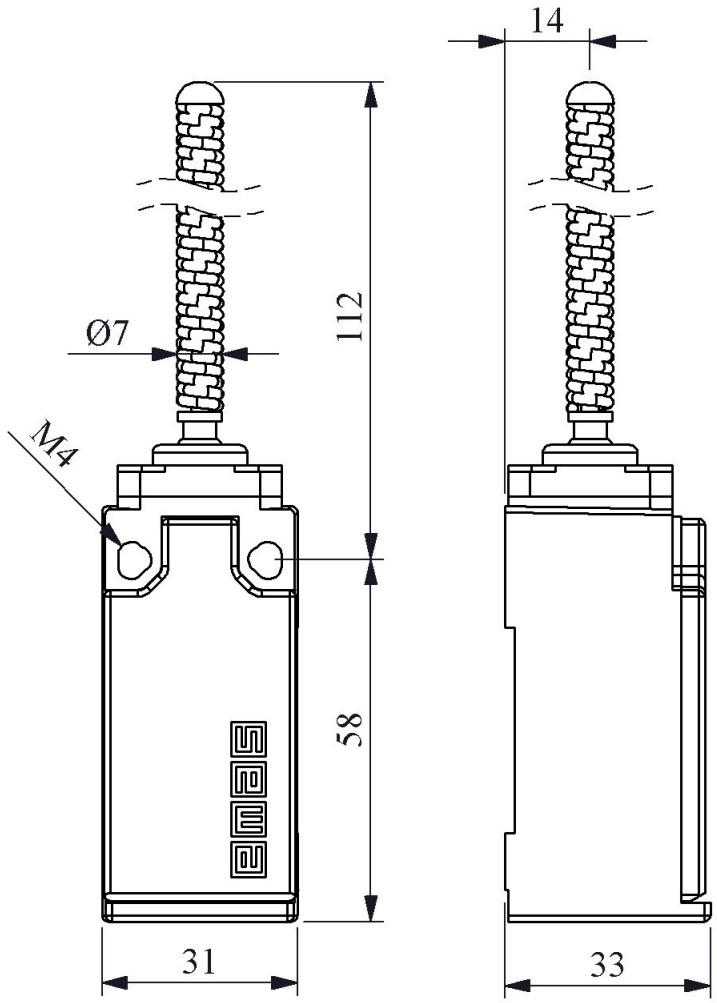

Devre Şeması

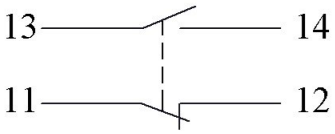

Ani Hareketli

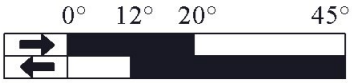

Akış Diyagramı