



L51K23HUM111	
Product	Limit Switch
Serial	L51 Metal Body
Actuator Material	Metal
Actuator	Rope Pull Safety Switch
Contact Action	Slow Action
Contact	1NO+1NC
Current (Ie)	3 A (240V AC)
Usage Category	AC15
Mechanical Life (Min Qty)	10000000
Electrical Life (Min Qty)	1000000
Operating Frequency (On-Off/Hour)	Mech. 3000 Elec. 1800
Insulation Voltage (Ui)	300 V
Impulse Withstand Voltage (Uimp)	2.5 kV
Dielectric Strength (Body-Contact)	1.890V AC
Dielectric Strength (Contact-Contact)	1.890V AC
Isolation Resistance	10 MΩ (500 V DC)
Operating Temperature	-25 / + 80 °C
Pollution Degree	3
Protection Degree	IP65
Contact Material	AgNi
Cable Section	1-2.5 mm2
Screw Torque	1.5Nm
	1 kA
Specifications	Metal Body and Cover
	1 cable entry suitable for PG13.5 or M20x1.5 optional gland
	Changeable contact block
	Different actuator options

Standards / Certificates	TS EN 60947-5-1 UL 508 VDE 0660

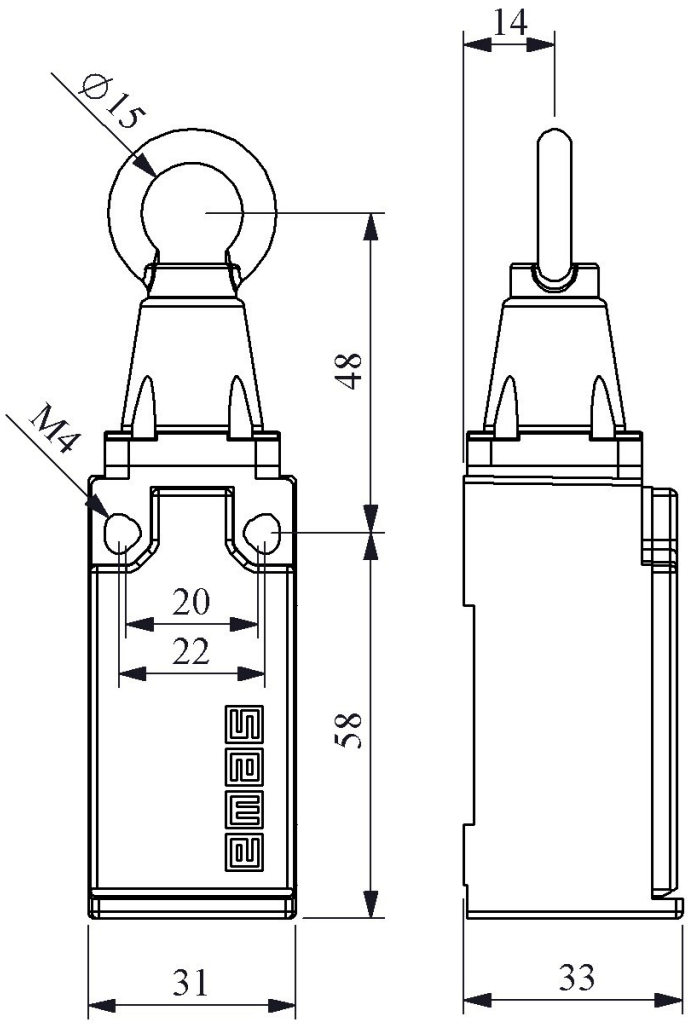

Devre Şeması

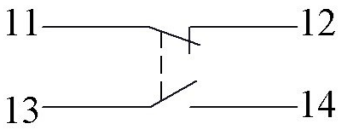

Yavaş Hareketli

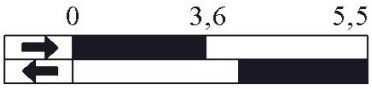

Akış Diyagramı